TONE
TEYI VAVLE

DOUBLE OFFSET FLANGED BUTTERFLY VALVE CLASS 150Lb-300Lb

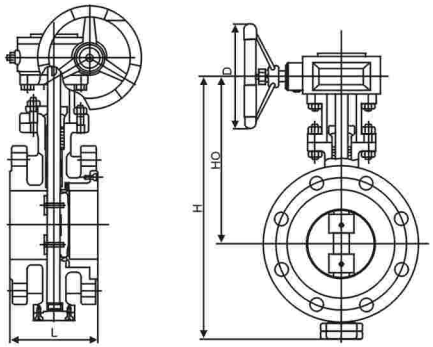

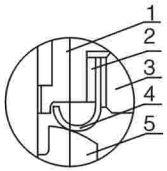

1、BODY
2、GASKET
3、RETAINER RING
4、FLEXIBLE METAL SEAL RING
5、DISC

Design Standard

1、Design and Manufacture Standard：API609
2、Material Pressure–Temperature Standard:ASME B 16.34
3、Face to face Dimension Standard
①、Flange short pattern to :ISO5752 basic series 13
Flange long pattern to :ASME B 16.10 For flanged gate valve
4、Flange ends dimension standard
Size≤24" to ANSI B16.5
Size≤24" to ANSI B16.47 Serise B
5、Inspection and test standard

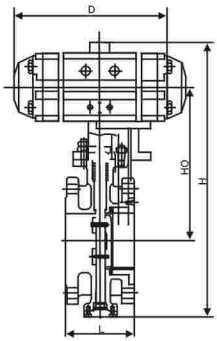

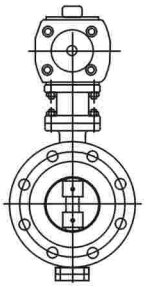

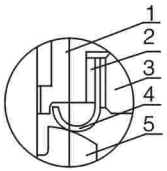

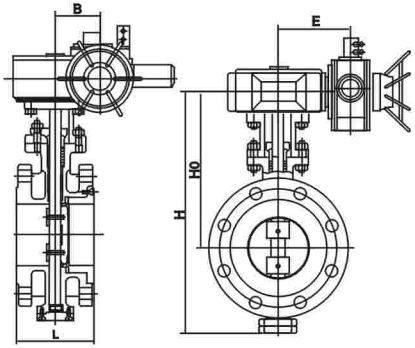

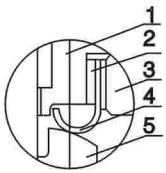

Main Outline Dimensions **Unit(mm)**

CLASS150																		
NPS		3"	4"	6"	8"	10"	12"	14"	16"	18"	20"	24"	26"	28"	30"	32"	34"	36"
L		180	190	210	230	250	270	290	310	330	350	390	410	430	450	470	490	510
Gear	H	320	342	415	510	567	665	739	825	910	990	1210	1341	1475	1572	1600	1728	1823
	H0	185	195	243	263	295	342	385	430	469	500	618	701	746	815	874	899	937
	D	160	160	300	400	400	600	600	600	800	800	800	400	400	400	400	400	400
CLASS300																		
NPS		3"	4"	6"	8"	10"	12"	14"	16"	18"	20"	24"	26"	28"	30"	32"	34"	36"
L		180	190	210	230	250	270	290	310	330	350	390	410	430	450	470	490	510
Gear	H	395	355	430	523	600	693	772	862	960	1158	1320	1447	1538	1607	1721	1970	1862
	H0	241	205	260	273	315	362	405	440	525	603	693	875	956	1095	1129	1162	1261
	D	160	160	300	400	400	600	600	600	800	800	800	400	400	400	400	400	400